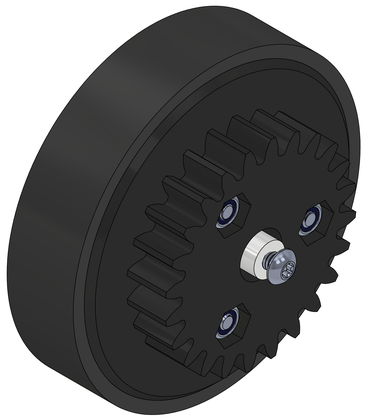

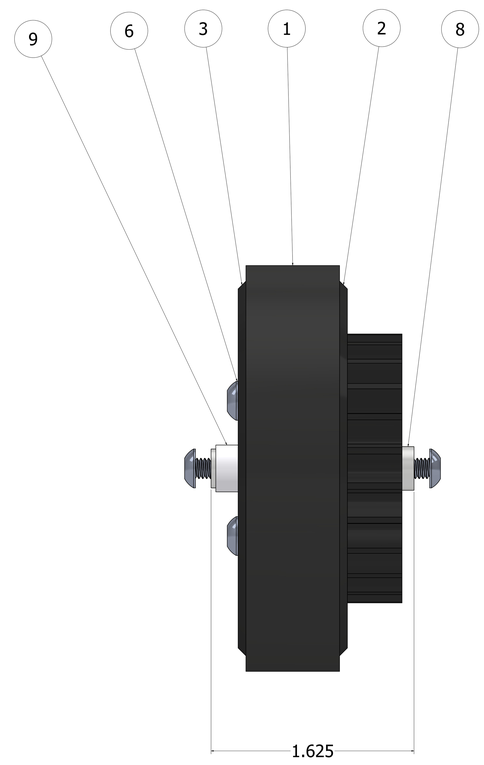

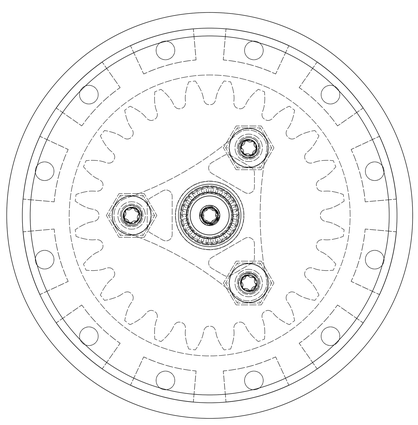

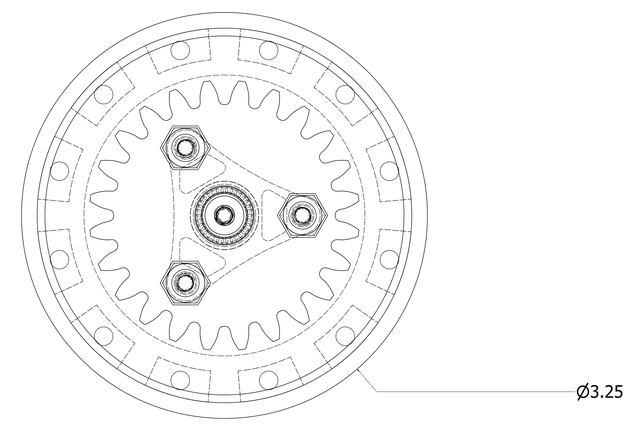

PARTS LIST

ITEM	QTY	PART NUMBER	DESCRIPTION
1	1	Traction Wheel Rubber	35A Silicone Rubber
2	1	Wheel Hub Inner	Inner Wheel Hub, Contains 24t gear on print
3	1	Wheel Hub Outer	Outer Wheel Hub, retains bearing
4	1	Traction Wheel Hub Spacer	Spacer to hold Bearings and bolts
5	2	FR1810-ZZ Flange Bearing	5/16x1/2x5/32 Bearing
6	5	8-32 Steel Screw	
7	3	Nut 8-32 THIN Nylock	Nylock nuts have internal nylon lock.
8	1	1.625" Traction Axle	Custom Lathed and Tapped Axle
9	1	Spacer	3D Printed Spacer

This drawing is the sole property of Arkansas Tech University. It is provided on the condition that it will not be used in any way that is harmful to the university's interests.
By accepting or using this drawing, you agree to this condition and acknowledge Arkansas Tech University's exclusive ownership.

TOLERANCES: UNLESS OTHERWISE SPECIFIED	
NO DECIMAL	X. ± 1
1 PLACE DECIMAL	X. X ± .03
2 PLACE DECIMAL	X.XX ± .01
3 PLACE DECIMAL	X.XXX ± .005
ANGLES	X° ± 15'

Traction Wheel Assembly

DRAWN: DATE:
CHECKED: SCALE:

SHEET: